PV 005 *Solar PV Connector*

Parameters

Type	PV005
Rated Voltage	1500V DC
Contact Materials	Tin plated copper
Rated Current	30A
Standard	IEC 62852:2014
Protection Degree	IP68
Contact Resistance	≤0.3mΩ
Ambient Temperature	−40℃~+85℃
Cable Cross Section Area	2.5mm²,4mm²,6mm²
Insulation Material	PV40Z
Flame Class	UL94 V−0

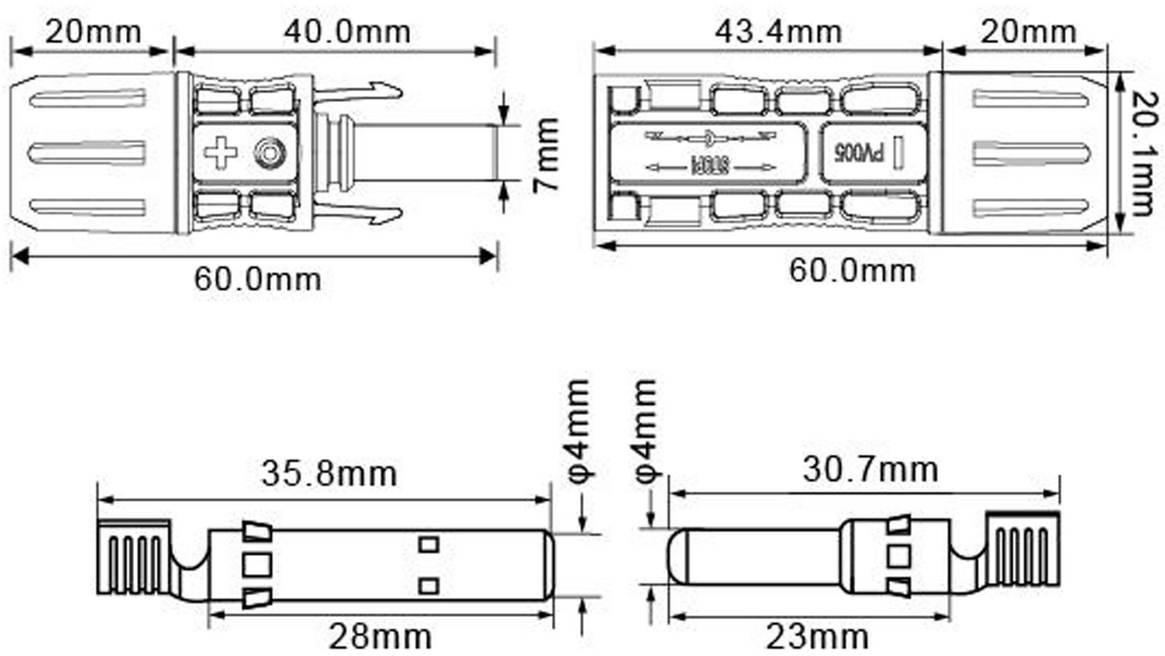

Feature

- Lower contact resistance
- Good heat resistance and cold resistance
- Quality Assurance for 5 years
- TUV certification
- Suitable for outdoor harsh environment
- Waterproof and dustproof design